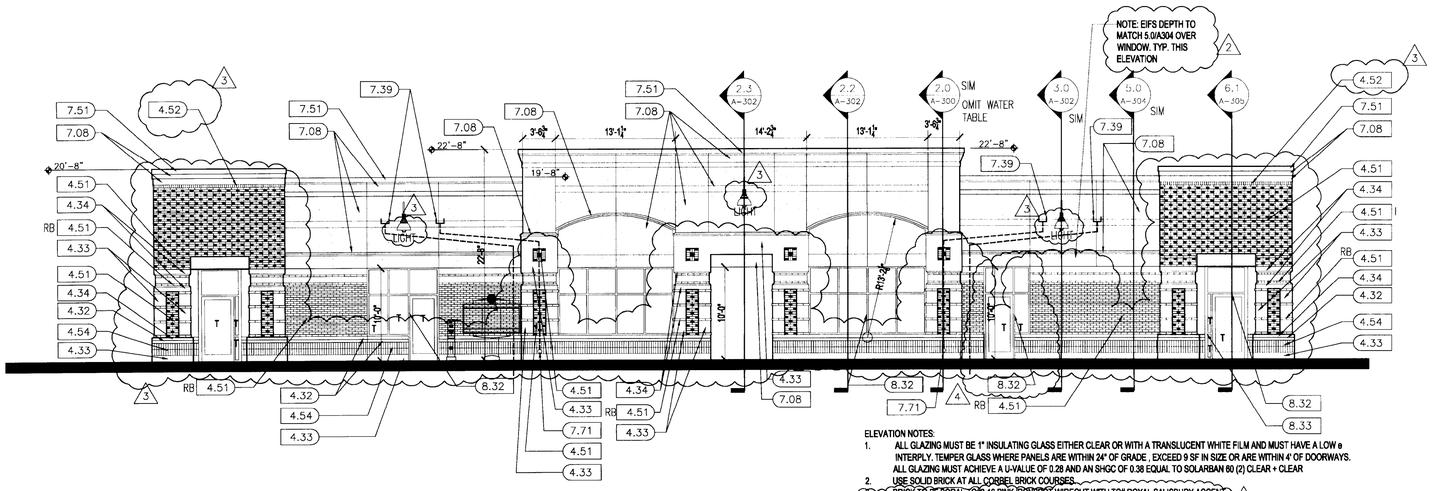

ELEVATION NOTES:
1. ALL GLAZING MUST BE 1" INSULATING GLASS EITHER CLEAR OR WITH A TRANSLUCENT WHITE FILM AND MUST HAVE A LOW e INTERPLY. TEMPER GLASS WHERE PANELS ARE WITHIN 24" OF GRADE , EXCEED 9 SF IN SIZE OR ARE WITHIN 4' OF DOORWAYS. ALL GLAZING MUST ACHIEVE A U-VALUE OF 0.28 AND AN SHGC OF 0.38 EQUAL TO SOLARBAN 60 (2) CLEAR + CLEAR
2. USE SOLID BRICK AT ALL CORBEL BRICK COURSES.
3. BRICK TO BE BORAL TC65-16 PINK IRONSPOT WIRECUT WITH TC# ROYAL SALISBURY ACCENT.
4. CAST STONE TO BE ROCK CAST

1 WEST (REAR) ELEVATION (FACING HIGHWAY 29)
SCALE: 1/8" = 1'-0"

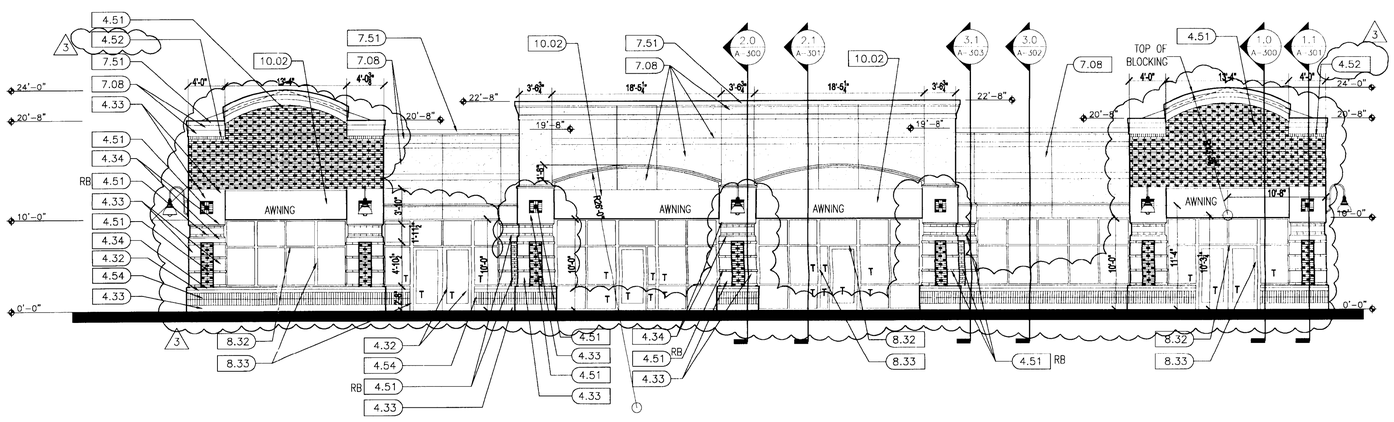

2 EAST (FRONT) ELEVATION (FACING SHOPPING CENTER)
SCALE: 1/8" = 1'-0"

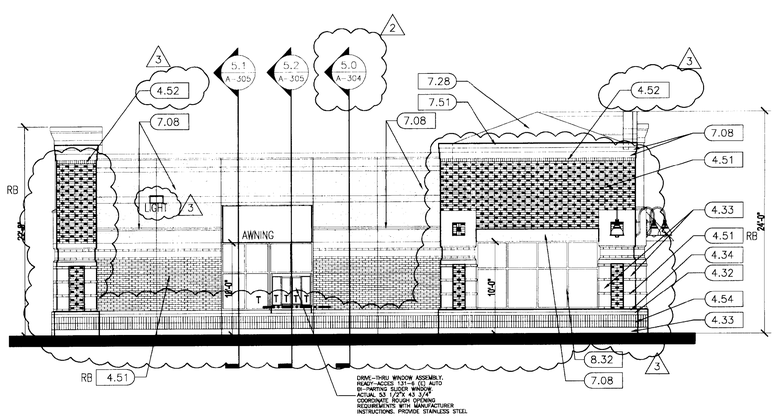

4 NORTH ELEVATION
SCALE: 1/8" = 1'-0"

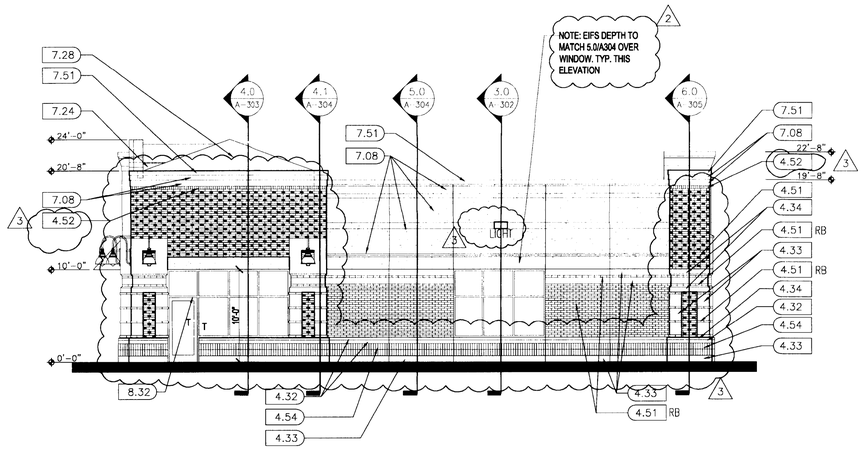

3 SOUTH ELEVATION
SCALE: 1/8" = 1'-0"

KEYED NOTES:

All items are to be furnished, installed, and connected by the Contractor unless otherwise noted.

2
2.01 Asphalt paving, see Civil dwgs.
2.02 Concrete paving w/reinf., see Civil dwgs.
2.03 6" Concrete curb, see Civil dwgs.
2.04 Concrete curb and gutter, see Civil dwgs.
2.05 Concrete dumpster pad, w/6x6 w1.4xw1.4 welded wire, thickness as noted.
2.07 Pipe bollard, paint traffic yellow, size as noted
2.08 Stone base, thickness as noted
2.13 4" thick concrete walk
2.15 Planted area, 4" w/min. 12" topsoil
2.16 Premoldex joint filler

3
3.04 Concrete topping, see Struct. dwgs.
3.06 Concrete slab w/W.W.F. reinforcing as noted, see Struct. for all reinforcing.
3.08 Control joint
3.09 Sill reinf., see Struct. dwgs.
3.31 Fill with grout
3.32 Fill with concrete
3.33 Precast concrete
3.34 Custom design Precast concrete medallion
3.35 Precast concrete column
3.36 Integral color concrete sidewalk

4
4.01 Horizontal Masonry reinf. @ 16" o.c. vert.
4.02 Veneer anchor @ 16" o.c. vert. and horiz., 1 per every 1.8 s.f. of wall area.
4.04 Masonry control joint
4.05 Masonry expansion joint
4.21 4", 6", or 8" smooth face cmu size as noted
4.22 Custom Concrete cast stone
4.23 8" CMU
4.24 10" CMU
4.25 12" CMU
4.26 Bond beam, fill w/ concrete height as shown see struct dwgs for req'd reinforcing
4.32 4" n. split face cast concrete stone unit
4.33 8" n. split face cast concrete stone unit
4.34 8" n. custom split face cast concrete stone unit
4.35 Cast stone watertable
4.51 Face Brick stretcher course in the pattern shown, and running bond where noted with RB. See ext. elev. for patterns.
4.52 Face Brick soldier course
4.53 Face Brick rowlock course (sloped)
4.54 Face Brick soldier course
4.56 Face Brick stacked bond course
4.57 Molded face Brick soldier course to form arch
4.58 Bullnose brick paver edge at planters
4.59 Brick wall at planter
4.61 Brick pavers, thick set, coordinate slab recess w/ paver

5
5.01 Sill ledger, see Struct. dwgs., paint exposed surfaces
5.02 Sill beam or joist girder, see Struct. dwgs., paint exposed surfaces
5.03 Sill joist see Struct. dwgs, paint where indicated on the soft drawings
5.04 Sill angle or bent plate, see Struct. dwgs., paint surfaces exposed to view
5.05 Sill plate, see Struct. dwgs., paint exposed surfaces
5.14 Brace back to struct., see Struct. dwgs. Attach at panel point of joist.
5.19 2" O" x 2" O" x 1/2" O" sq st. pipe rail. Provide 2 horizontal rows, top of rail at 3' 0". Paint traffic yellow
5.24 Awning framework, paint exposed frames
5.31 Anchor bolt, see Struct. dwgs.
5.34 1/2" dia. headed studs welded to channel w/ large washer (countersunk) in wood blocking
5.35 1/2" dia. anchor bolt at 32" o.c. w/ large washer (countersunk) in wood blocking
5.36 Pewter coated aluminum handrail. Color to match storefront.

6
6.01 F.R. fire retardant treated wd. blocking, size as noted
6.03 P.T. wd. blocking, size as noted
6.05 Wood framing, size noted.
6.06 Wood blocking, size noted.
6.09 Prefab wood roof trusses
6.10 5/8" plywood sheathing, see structural
6.11 Ext. plywood sheathing, size as noted
6.12 AC grade plywood, paint
6.13 Ext. grade plywood, size as noted
6.14 1/2" Dens-Glass gold Firestop, Type X by Georgia Pacific
6.16 1/2" Exterior Grade Plywood Sheathing. Use multiple layers to conform to curved surfaces at curved roofs.
6.42 Smooth finish wd. trim, size noted, paint.
6.43 F.R. ornamental brackets

7
7.01 6 Mil vapor barrier
7.02 Damproofing, cont. over all CMU surfaces to receive brick veneer
7.03 Tyvek Commercial vapor barrier. Contr. to coordinate w/ 7.08
7.04 15# Asphalt felt underlayment
7.05 Exterior sealant, cont.
7.06 Interior caulking, cont.
7.07 Joint backer
7.08 Exterior finish and insulation system (E.I.F.S.) Insulation thickness as noted. Equal to Dryvit NI system
7.09 Membrane waterproofing with protection board
7.12 Foam-in place masonry insulation
7.13 24" Deep Perimeter Insulation, 1" thick typ. U.N.O.
7.14 Rigid or semi-rigid insulation between furring
7.15 R-11 batt insulation, unfaced
7.16 R-21 batt insulation, unfaced wall insulation
7.17 Roof insul. meeting w. TT56 and TM 4450. R 21.7 min thickness 2.5"
7.18 Tapered roof insul. meeting w. TT56 and TM 4450. Min. 1/4" per 12" slope to achieve drainage indicated.
7.19 Drafstopping insulation
7.20 Sound attenuation insulation
7.23 Full adhered low slope roof protection underlayment
7.24 Full adhered flexible sheet roofing system, white color. TPO
7.28 Jumbo Slate by Ludowici roofing, no substitutions.
7.50 3 tab asphalt shingles
7.55 Roofing termination bar, per manuf. requirements
7.59 Small area roof drain to be Zurn Z 200 and overflow drain. Contractor to coordinate with plumbing
7.47 Perforated aluminum gravel stop with baked enamel finish
7.48 Conc. metal roof piping access hatch, paint, furnished and installed by Contr.
7.49 Copper flashing
7.50 Prefinished galvanized metal flashing
7.51 Preformed, prefinished aluminum gravel stop with cont. hold down clips on front. Provide copper coping where noted
7.53 Alum. flashing with baked enamel finish
7.61 Thru wall flashing with weeps at 2' 0" o.c.
7.71 Zurn Z199 Wrenex downspout nozzle, typ at 2 overflow downspouts
7.94 Expansion & coverage flashing as per manuf. instructions for commercial applications over sills and heads.

8
8.01 Hollow metal door, paint
8.07 Metal frame, paint
8.13 Access door, paint, provide as shown in canopy soffit area
8.23 Solid core wd. door, paint U.N.O.
8.31 Alum. and glass door
8.32 Alum. storefront 4 1/2" x 2", typ. U.N.O. color Clear anodized
8.33 Alum. storefront 4 1/2" x 4 1/2", color Clear anodized
8.34 Hollow mtl. alum., finish to match storefront system
8.35 Alum storefront door, size as noted, finish to match storefront
8.47 1" clear insulating glass low E, see elev. notes
8.48 1" clear insulating glass low E, tempered see elev. notes.
8.51 Alum. threshold, set in full bed of mastic

9
9.01 5/8" Exterior Grade Gypsum Ceiling Board, paint exposed surfaces
9.02 5/8" MR GWB w/type "C" firecore, paint exposed surfaces U.N.O
9.03 5/8" GWB, paint exposed surfaces U.N.O.
9.04 5/8" GWB w/type "C" firecore, paint exposed surfaces U.N.O.
9.05 5/8" moisture resistant GWB, paint exposed surfaces
9.10 Self furring metal lath, screw attached to framing, typ. behind stone recessed band 1' 0" high by length of pier.
9.22 2" x 2" clip in accoustical ceiling tile. See Finish Schedule.
9.23 2" x 2" clip in accoustical ceiling tile. See Finish Schedule.
9.35 Resilient floor tile
9.36 4" high resilient base
9.37 Paint
9.52 Clear transparent stain
9.53 Opaque stain
9.54 Special coating w/ block fill type primer
9.55 Metal prefinished system

10
10.02 Fabric awning, fabric must be flame resistant, approved class A or class B rated by ASTM e 84
10.04 Fire extinguisher, verify final location w/Fire Marshall

ATTACHED TO ADMINISTRATIVE APPROVAL
DATED: 3-16-2012 SF
BY: DEBRA D. CAMPBELL

SHOPS at MALLARD POINTE

MALLARD POINTE SHOPPING CENTER
CHARLOTTE, NC 28262
for:
MALLARD POINTE ASSOCIATES, LLC
CHARLOTTE, NC

CHILDREY ROBINSON ASSOCIATES
1212 S. KYLE NORFLEET AVENUE
CHARLOTTE, NORTH CAROLINA 28204
PHONE: 704.376.0000 FAX: 704.376.0006
www.childreyrobinson.com

This drawing is the property of Childrey Robinson Associates. It is provided is not to be copied or reproduced in any form or manner, nor is it to be used on any other project and must be returned to Childrey Robinson Associates upon request.
Copyright 2006, Childrey Robinson Associates.

Written dimensions have precedence over scaled dimensions.

REGISTERED ARCHITECT 5496 NORTH CAROLINA CHARLOTTE, N. C.
3/7/12

2	1-10-12 COORDINATION
3	2-3-12 DESIGN REV
4	2-27-12 TENANT REV

12-5-11

ELEVATIONS

A-102

CHARLOTTE

Charlotte-Mecklenburg Planning Department

DATE: March 16, 2012

TO: Mark Fowler
Zoning Supervisor

FROM: Debra Campbell
Planning Director

SUBJECT: Administrative Approval for Petition No. 1995-062
Cambridge Properties, INC

Attached is are the revised elevations and landscaping plan for the above referenced rezoning petition. The attached elevations and landscaping plans are consistent with the existing shopping center. Since this change does not alter the intent of the development and meets the requirements of the Charlotte Zoning Ordinance Section 6.207 Alterations to Approval, minor changes, I am administratively approving this plan. Please use these plans when evaluating requests for building permits and certificates of occupancy.

Note: All other Zoning, Tree Ordinance and conditional requirements still apply.