EROSION CONTROL GENERAL NOTES:

1. THIS EROSION CONTROL PLAN IS FOR THE CLEARING, GRADING AND CONSTRUCTION ACTIVITIES WITHIN THE DISTURBED AREAS INDICATED BY PROPOSED CONTOURS OR LIMITS. STABILIZATION IS THE BEST FORM OF EROSION CONTROL. TEMPORARY SEEDING IS NECESSARY TO ACHIEVE EROSION CONTROL ON LARGE DENUDED AREAS AND ESPECIALLY WHEN SPECIFICALLY REQUIRED AS PART OF THE CONSTRUCTION SEQUENCE SHOWN ON THE PLAN. ALL GRADED SLOPES MUST BE SEEDED AND MULCHED WITHIN 15 DAYS OF COMPLETION OF GRADING. ALL REMAINING AREAS ARE TO BE SEEDED AND MULCHED WITHIN 30 DAYS.
2. GRADING MORE THAN ONE ACRE WITHOUT AN APPROVED EROSION CONTROL PLAN OR GRADING OUTSIDE THE DENUDED LIMITS SHOWN ON THE PLAN IS A VIOLATION OF THE CITY/COUNTY EROSION CONTROL ORDINANCE AND IS SUBJECT TO A FINE.
3. APPROVAL OF THIS PLAN IS NOT AUTHORIZATION TO GRADE ADJACENT PROPERTIES. WHEN FIELD CONDITIONS WARRANT OFF-SITE GRADING, PERMISSION MUST BE OBTAINED FROM THE AFFECTED PROPERTY OWNERS.
4. ON-SITE BURIAL PITS, IF PROPOSED, REQUIRE AN ON-SITE DEMOLITION LANDFILL PERMIT FROM THE ZONING ADMINISTRATOR. NO ON-SITE BURIAL PITS ARE PROPOSED FOR THIS DEVELOPMENT.
5. ADDITIONAL EROSION CONTROL MEASURES MAY BE REQUIRED BY A REPRESENTATIVE OF THE CITY/COUNTY ENGINEEERING DEPT.
6. ALL "STD." NUMBERS REFER TO THE CHARLOTTE/MECKLENBURG LAND DEVELOPMENT STANDARDS MANUAL. SEE DETAIL SHEET FOR NOTES, SEQUENCES, SPECIFICATIONS, CALCULATION DATA AND RELATED DETAILS.
7. SLOPES SHALL BE GRADED NO STEEPER THAN 2:1.
8. SOIL TYPES:
   EnD – Enon sandy loam, 8-15% (Hydrologic Group C)
   MeB – Mecklenburg fine sandy loam, 2-8% (Hydrologic Group B)
   MeD – Mecklenburg fine sandy loam, 8-15%. (Hydrologic Group C)
   Mo – Monacan soils. (Hydrologic Group C)
   WkD – Wilkes loam, 8-15% (Hydrologic Group C)
9. TOTAL DISTURBED AREA = 16.5 ACRES.
10. SEE DETAIL SHEETS FOR ADDITIONAL EROSION CONTROL DETAILS, SEQUENCES, NOTES AND SPECIFICATIONS. SEE MILL CREEK SUBDIVISION PLANS FOR EROSION CONTROL MEASURES ON ADJACENT DEVELOPMENT.
11. OMIT LOWER PORTIONS OF PIPE RUNS TO FLARED END SECTIONS NEAR SEDIMENT TRAPS UNTIL THOSE PORTIONS OF THE SITE HAVE BEEN STABILIZED AND SEDIMENT TRAPS ARE REMOVED.
12. MINOR MODIFICATIONS TO THE PLACEMENT OF EROSION CONTROL MEASURES MAY BE NECESSARY DEPENDING UPON FIELD CONDITIONS AND THE PROGRESS OF CONSTRUCTION.
13. IN CASES WHERE SEDIMENT BASINS ARE CONTAINED WITHIN LARGER PROPOSED DETENTION BASIN AREAS, CONTRACTOR MAY PROVIDE THE FINAL DETENTION BASIN GRADING SHOWN ON PLANS TO FUNCTION AS SEDIMENT BASIN VOLUMES.
14. STORM DRAINAGE PIPE AND STRUCTURES NEAR FUTURE CLUB SITE (HW#31-DI#33) WILL BE DESIGNED AND INSTALLED WITH CLUB SITE DEVELOPMENT.

PLANTING SPECIFICATIONS/NOTES:

1. CONTRACTOR TO VERIFY ALL QUANTITIES OF PLANT MATERIAL AND REPORT ANY SHORTAGES OF MATERIAL TO OWNER PRIOR TO INSTALLATION.
2. ALL MATERIAL TO BE INSPECTED FOR APPROVAL PRIOR TO PLANTING.
3. ALL TREES TO BE STAKED AFTER PLANTING.
4. ALL PLANTING PITS TO BE AMENDED WITH A SOIL CONDITIONER OR PLANTING MIX PRIOR TO
5. AMEND PLANTING BEDS WITH AN ANTI-DESSICANT, USE AXIS OR APPROVED EQUAL ACCORDING TO MANUFACTURER SPECIFICATIONS.
6. ALL TREES AND PLANTING BEDS TO BE MULCHED WITH A 3" LAYER OF PINE NEEDLES.
7. ALL ROOT BALLS TO BE PLACED 4" ABOVE GRADE TO PROVIDE PROPER DRAINAGE.
8. ALL PLANTS SHALL BE IN ACCORDANCE WITH AMERICAN STANDARD FOR NURSERY STOCK, SHALL BE UNIFORM IN SIZE AND CONFIGURATION, AND BE VIGOROUS AND HEALTHY.

PLANT SCHEDULE

Symbol	Qty.	Scientific Name / Common Name	Height/ Cal.Size	Spacing	Cond.	Notes
Trees						
THUP	5	Thuja plicata GIANT ARBORVITAE	8' Ht.	--	B&B	Specimen, Straight trunk
Shrubs						
ILEG	7	Ilex glabra INKBERRY HOLLY	30"	--	3 Gal.	
OSMF	9	Osmanthus fragrans FORTUNE TEA OLIVE	30"	--	3 Gal.	

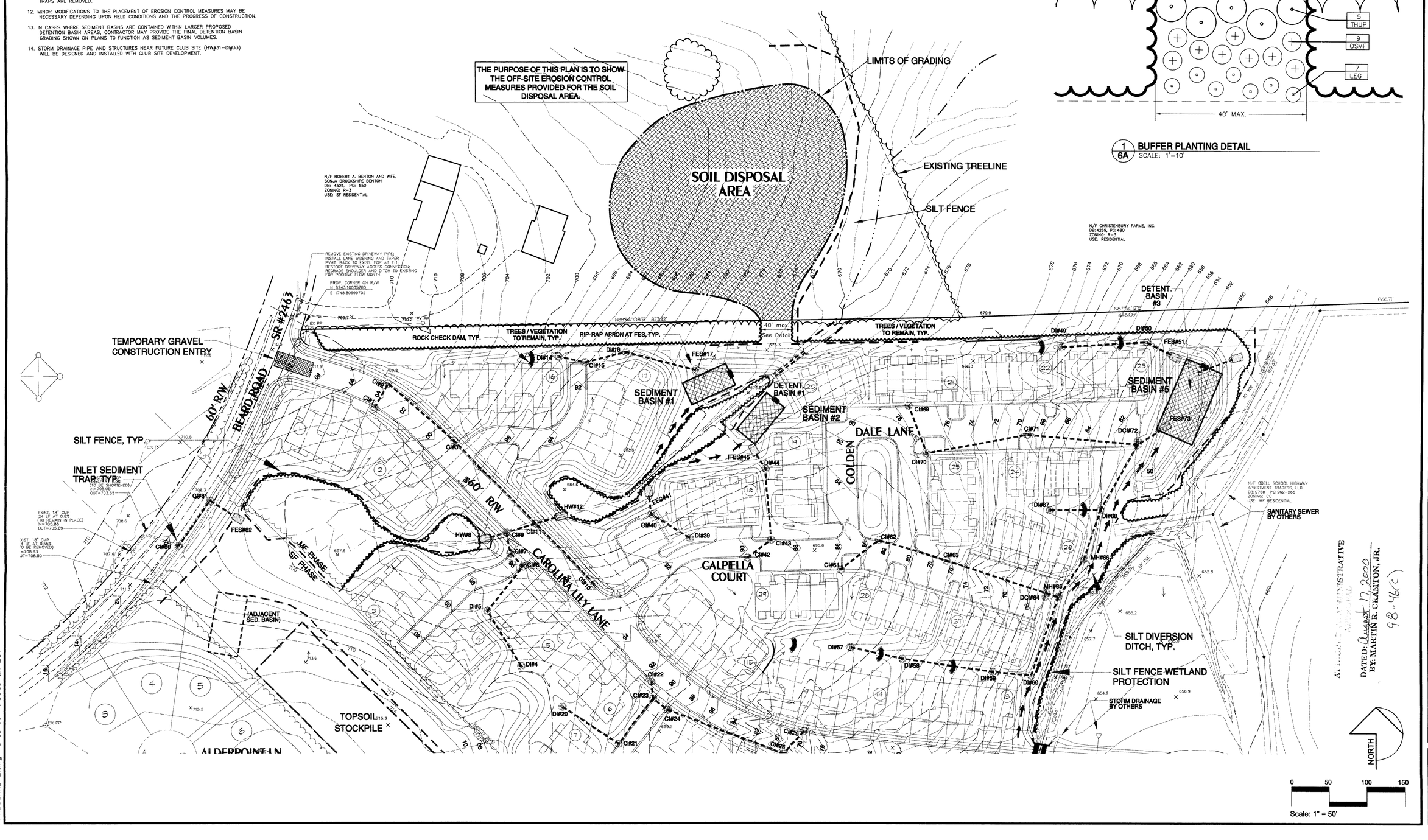

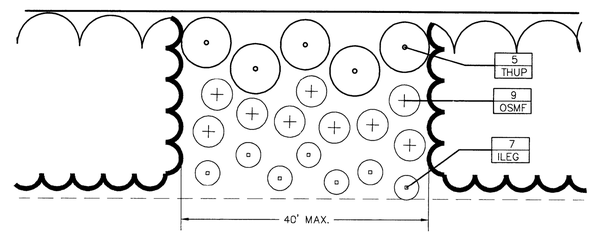

1/6A BUFFER PLANTING DETAIL
SCALE: 1'=10'

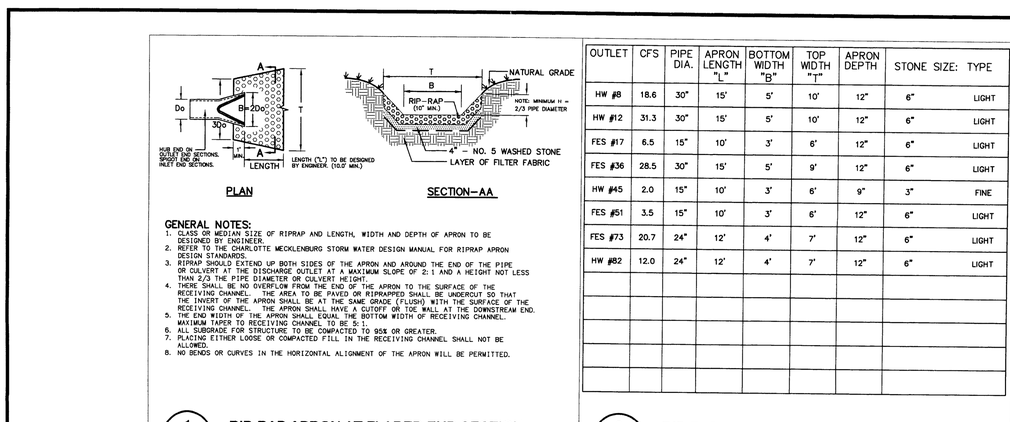

1/8 RIP-RAP APRON AT FLARED END SECTION
NO SCALE — CHAR.– MECK. STD. DET. #20.23

OUTLET	CFS	PIPE DIA.	APRON LENGTH "L"	BOTTOM WIDTH "B"	TOP WIDTH "T"	APRON DEPTH	STONE SIZE: TYPE
HW #8	18.6	30"	15'	5'	10'	12"	6" LIGHT
HW #12	31.3	30"	15'	5'	10'	12"	6" LIGHT
FES #17	6.5	15"	10'	3'	6'	12"	6" LIGHT
FES #36	28.5	30"	15'	5'	9'	12"	6" LIGHT
HW #45	2.0	15"	10'	3'	6'	9"	3" FINE
FES #51	3.5	15"	10'	3'	6'	12"	6" LIGHT
FES #73	20.7	24"	12'	4'	7'	12"	6" LIGHT
HW #82	12.0	24"	12'	4'	7'	12"	6" LIGHT

1/8 RIP-RAP APRON SPECIFICATIONS
NO SCALE — CHAR.– MECK. STD. DET. #20.23

1/8 GRAVEL & RIP-RAP SEDIMENT BASIN
NO SCALE — CHAR.– MECK. STD. DET. #30.02

GENERAL NOTES:
1. AREA UNDER EMBANKMENT SHALL BE CLEARED, GRUBBED, AND STRIPPED OF ANY VEGETATION AND ROOT MAT. THE POOL AREA SHALL ALSO BE CLEARED.
2. THE FILL MATERIAL FOR THE EMBANKMENT SHALL BE FREE OF ROOTS OR OTHER WOODY VEGETATION AS WELL AS OVER-SIZED STONES, ROCKS, ORGANIC MATERIAL OR OTHER OBJECTIONAL MATERIAL. THE EMBANKMENT SHALL BE COMPACTED BY TRAVERSING WITH EQUIPMENT WHILE BEING CONSTRUCTED. SPILLWAYS SHOULD NOT BE CONSTRUCTED THROUGH FILL SECTIONS.
3. SEDIMENT SHALL BE REMOVED AND TRAP RESTORED TO ITS ORIGINAL DIMENSIONS WHEN THE SEDIMENT HAS ACCUMULATED TO 7 THE DESIGN DEPTH OF TRAP. REMOVED SEDIMENT SHALL BE DEPOSITED IN A SUITABLE AREA IN SUCH A MANNER THAT IT WILL NOT ERODE.
4. THE TRAP SHALL BE INSPECTED AFTER EACH RAIN AND REPAIRS MADE AS NEEDED.
5. CONSTRUCTION OPERATIONS SHALL BE CARRIED OUT SUCH THAT EROSION AND WATER POLLUTION IS MINIMIZED.
6. ALL CUT AND FILL SLOPES SHALL BE 2:1 OR FLATTER.
7. IF SEDIMENT BASIN IS IN USE 30 DAYS OR LONGER, EMBANKMENTS SHALL BE SEEDED OR STABILIZED.
8. STORAGE AREA IS SHOWN AS RECTANGULAR FOR ILLUSTRATIVE PURPOSES ONLY AND MAY BE CONSTRUCTED IN ANY SHAPE PROVIDED THE MINIMUM STORAGE VOLUME REQUIREMENT IS MET. THE BASIN SHOULD BE ORIENTED SO THAT THE FILTER AND THE MAIN FLOW OF WATER AND SEDIMENT ARE ON OPPOSITE ENDS OF THE LONGER BASIN DIMENSIONS.
9. REQUIRED STORAGE IS 1800 CF PER DENUDED ACRE. RECOMMENDED STORAGE IS 1800 CF PER ACRE OF DRAINAGE AREA.
10. LENGTH OF STONE OUTLET (SPILLWAY) IS TO BE BASED ON A 10-YEAR STORM.
11. WHENEVER TOPOGRAPHY ALLOWS, BASIN LENGTH SHOULD BE TWICE (2X) THE BASIN WIDTH, TO ALLOW FOR SETTLING. BAFFLES SHOULD BE PROVIDED IN BASINS WHERE LENGTH IS LESS THAN TWICE THE WIDTH.
12. CLEANOUT STAKES SHALL BE PLACED IN ALL SEDIMENT BASINS AT LOW POINT IN THE BASIN. THE STAKES SHALL BE MARKED SHOWING THE HALF FULL, CLEANOUT POINT, OF THE BASIN.
13. SAFETY FENCING 3' HIGH SHOULD BE PLACED AROUND ALL SEDIMENT BASINS.
14. FOR DESIGN OF RISER TYPE SEDIMENT BASINS, REFER TO THE N.C. D.E.H.N.R. EROSION AND SEDIMENT CONTROL PLANNING AND DESIGN MANUAL.

SEDIMENT BASIN DATA:

BASIN	DRAIN AREA	Q CFS	DENUDED AREA	REQUIRED VOLUME	VOLUME PROVIDED	W	L	Z	H	R	S	TOP DIM.	BOTTOM DIM.
1	1.5	6.33	1.5	2700 CF	2808 CF	6'	10'	7'	4'	3'	1.5'	31x52	15x36
2	1.5	6.33	1.5	2700 CF	2808 CF	6'	10'	7'	4'	3'	1.5'	31x52	15x36
3	2.5	10.55	2.5	4500 CF	7308 CF	6'	10'	7'	4'	3'	1.5'	37x65	21x49
4	1.5	6.33	1.5	2700 CF	2808 CF	6'	10'	7'	4'	3'	1.5'	31x52	15x36
5	5.5	23.2	5.5	9900 CF	5508 CF	6'	10'	7'	4'	3'	1.5'	51x91	35x75

1/8 SEDIMENT BASIN SPECIFICATIONS
NO SCALE — CHAR.– MECK. STD. DET. #30.03

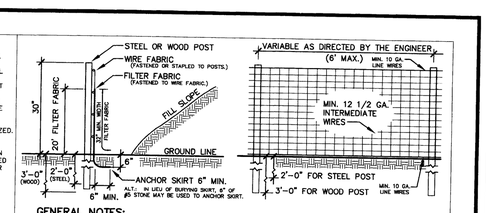

1/8 TEMPORARY SILT FENCE
NO SCALE — CHAR.– MECK. STD. DET. #30.06

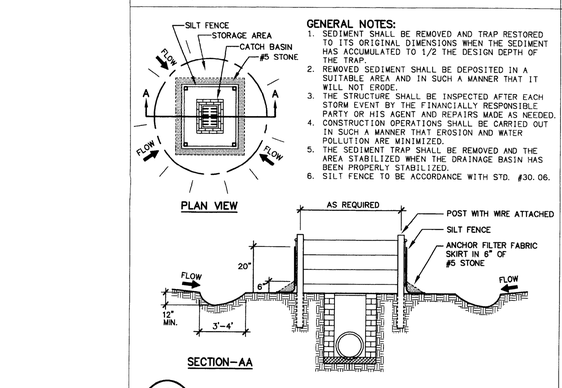

1/8 SILT FENCE STORM INLET SEDIMENT TRAP
NO SCALE — CHAR.– MECK. STD. DET. #30.09

GENERAL NOTES:
1. A STABILIZED ENTRY PAD OF #5 WASHED STONE OR RAILROAD BALLAST SHALL BE LOCATED WHERE TRAFFIC WILL ENTER OR LEAVE THE CONSTRUCTION SITE ONTO A PUBLIC STREET.
2. FILTER FABRIC OR COMPACTED CRUSHER RUN STONE MAY BE USED AS A BASE FOR THE CONSTRUCTION ENTRY.
3. THE ENTRANCE SHALL BE MAINTAINED IN A CONDITION WHICH WILL PREVENT TRACKING OR FLOWING OF SEDIMENT ONTO PUBLIC STREETS OR EXISTING PAVEMENT. THIS MAY REQUIRE PERIODIC TOP DRESSING WITH ADDITIONAL STONE AS CONDITIONS WARRANT AND REPAIR AND/OR CLEANOUT OF ANY MEASURES USED TO TRAP SEDIMENT.
4. ALL SEDIMENT SPILLED, DROPPED, WASHED OR TRACKED ONTO PUBLIC STREETS MUST BE REMOVED IMMEDIATELY.
5. WHEN APPROPRIATE, WHEELS MUST BE CLEANED TO REMOVE SEDIMENT PRIOR TO ENTERING A PUBLIC STREET. WHEN WASHING IS REQUIRED, IT SHALL BE DONE ON AN AREA STABILIZED WITH CRUSHED STONE WHICH DRAINS INTO AN APPROVED SEDIMENT BASIN (SEE STD. 30.118)
6. SOIL STABILIZATION FABRIC TO BE USED SHALL BE MIRAFI 500 OR APPROVED EQUAL.
7. CDOT MAY REQUIRE A STANDARD COMMERCIAL DRIVEWAY (STD. 10.24/10.25) TO ACCESS THE CONSTRUCTION SITE IF THE DRIVEWAY IS ON A THOROUGHFARE.

1/8 STABILIZED CONSTRUCTION ENTRANCE
NO SCALE — CHAR.– MECK. STD. DET. #30.11

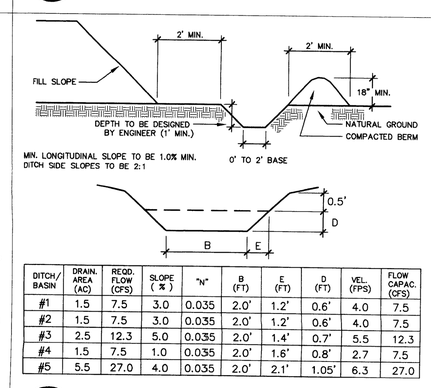

DITCH/ BASIN	DRAIN. AREA (AC)	REQD. FLOW (CFS)	SLOPE (%)	"N"	B (FT)	E (FT)	D (FT)	VEL. (FPS)	FLOW CAPAC. (CFS)
#1	1.5	7.5	3.0	0.035	2.0'	1.2'	0.6'	4.0	7.5
#2	1.5	7.5	3.0	0.035	2.0'	1.2'	0.6'	4.0	7.5
#3	2.5	12.3	5.0	0.035	2.0'	1.4'	0.7'	5.5	12.3
#4	1.5	7.5	1.0	0.035	2.0'	1.6'	0.8'	2.7	7.5
#5	5.5	27.0	4.0	0.035	2.0'	2.1'	1.05'	6.3	27.0

1/8 TEMPORARY SILT DITCH (DIVERSION DITCH)
NO SCALE — CHAR.– MECK. STD. DET. #30.05

3:1 SLOPES OR FLATTER
1. Apply agricultural lime at rate of 90 LBS./1000 SF.
2. Apply 10-10-10 commercial fertilizer at the rate of 20 LBS./1000 SF.
3. Seed according to the following schedule and application rates:

DATE	TYPE	PLANTING RATE
Aug. 15 – Nov. 1	Tall Fescue	300 LBS. /AC. or 7 LBS. /1000 SF.
Nov. 1 – Mar. 1*	Tall Fescue and Abruzzi Rye	300 LBS. /AC. or 7 LBS. /1000 SF. 25 LBS. /AC. or 0.5 LBS. /1000 SF.
Mar. 1 – Apr. 15	Tall Fescue	300 LBS. /AC. or 7 LBS. /1000 SF.
Apr. 15 – Jul. 15	Mulled Common Bermuda Grass	30 LBS. /AC. or 0.75 LBS. /1000 SF.
Jul. 15 – Aug. 15	Tall Fescue Browntop Millet Sorghum Sudan Hybrids	300 LBS. /AC. or 7 LBS. /1000 SF. 35 LBS. /AC. or 1 LB. /1000 SF. 30 LBS. /AC. or 0.75 LB. /1000 SF.

4. Mulch with straw applied at the rate of 75-100 LBS. /1000 SF.
   * Heavy mulched during Jan. – Mar. period.

SLOPES GREATER THAN 3:1 TO 2:1 SLOPES
1. Apply agricultural lime at rate of 90 LBS. /1000 SF.
2. Apply 10-10-10 commercial fertilizer at the rate of 20 LBS. /1000 SF.
3. Seed according to the following schedule and application rates:

DATE	TYPE	PLANTING RATE
Mar. 1 – Jun. 1	Sericea Lespedeza (scarified)	50 LBS. /AC. or 1.5 LBS. /1000 SF.
Mar. – Apr. 1 Mar. – Jun.	Tall Fescue Weeping Lovegrass	150 LBS. /AC. or 3.5 LBS. /1000 SF. 5 LBS. /AC. or 1/8 LB. /1000 SF.
June – Sept. 1**	Tall Fescue and Brown Top Millet Sorghum Sudan Hybrids	60 LBS. /AC. or 1.5 LBS. /1000 SF. 35 LBS. /AC. or 1.0 LB. /1000 SF. 30 LBS. /AC. or 0.75 LB. /1000 SF.
Sept. – Mar. 1	Sericea Lespedeza (unhulled/unscarified) Tall Fescue Millet or Sudan	70 LBS. /AC. or 1.75 LBS. /1000 SF. 150 LBS. /AC. or 3.5 LBS. /1000 SF. 20 LBS. /AC. or 0.5 LB. /1000 SF.

4. Mulch with 3" straw applied at the rate of 50 – 90 LBS. /1000 SF. and anchor with asphalt emulsion tack applied at the rate of 200 – 400 GAL. /AC.
   ** Temporary – Reseed Sept. 1 at recommended rates.

1/8 STANDARD SEEDING SPECIFICATIONS
NO SCALE

PRE-CONSTRUCTION PHASE
1. Request pre-construction conference with MCED inspector: (704) 579-1261
2. Install stone construction entrance and erosion devices necessary for phase of grading, per inspector.
3. Inform MCED inspector of completion of device installation and request an inspection for compliance with standards.
4. Receive grading permit from MCED inspector.

CLEARING AND GRUBBING PHASE
1. Begin clearing and grading operations.
2. Repair and maintain erosion control devices in place as well as those added at the direction of the MCED inspector.

SITE IMPROVEMENT PHASE
1. Receive approval for improvement construction.
(A) 2. Begin storm drainage and other infrastructure construction.
3. Install sediment traps at inlets.
4. Seed and fertilize disturbed areas not involved in further construction.
5. Complete site construction and stabilize site.

FINAL INSPECTION PHASE
1. Remove temporary erosion control devices, distribute accumulated sediment and stabilize those locations.
2. Request pre-final inspection for "punch list" items.
3. Request final inspection from MCED inspector.
4. Site approved, bond released or MCED Certificate of Occupancy hold removed.

(A) Contractor shall omit last sections of storm drainage pipe to divert runoff into sediment basins. Once site has been stabilized, pipe installation to flared end sections can be completed.

1/8 MECK. CO. CONSTRUCTION SEQUENCE
NO SCALE

GRADED SLOPES AND FILLS:
The angle for graded slopes and fills shall be no greater than the angle which can be retained by vegetative cover or other adequate erosion control devices or structures. In any event, slopes left exposed shall, within 30 working days of completion of any phase of grading, be planted or otherwise provided with groundcovers, devices, or structures sufficient to restrain erosion.

GROUNDCOVER:
Whenever land-disturbing activity is undertaken on a tract comprised of more than one acre, or if more than one contiguous acre is uncovered, a groundcover sufficient to restrain erosion must be planted or otherwise provided within 30 working days on that portion of the tract upon which further active construction is not being undertaken, provided that this subsection(c) shall not apply to cleared land forming the basin of a reservoir later to be inundated. Additional erosion control measures may be required depending on field conditions.

STANDARD SEEDBED PREPARATION NOTES:
1. Surface water control measures to be installed according to plan.
2. Areas to be seeded shall be ripped and spread with available topsoil 3" deep. Total seedbed prepared depth shall be 4"-6" deep.
3. Loose rocks, roots, and other obstructions shall be removed from the surface so that they will not interfere with the establishment and maintenance of vegetation. Surface for final seedbed preparation, at finish grades shown, shall be reasonably smooth and uniform.
4. If no soil test is taken, fertilizer and lime to be applied according to seeding specifications listed. In addition, provide 15 lbs/1000 SF of superphosphate.
5. If soil test is taken, provide lime and fertilizer according to soil test report.
6. Lime and fertilizer shall be applied uniformly and mixed with the soil during seedbed preparation.

1/8 EROSION/SEEDBED PREPARATION NOTES
NO SCALE

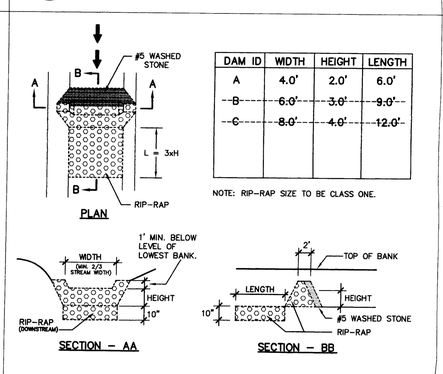

DAM ID	WIDTH	HEIGHT	LENGTH
A	4.0'	2.0'	6.0'
~~B~~	~~6.0'~~	~~3.0'~~	~~9.0'~~
~~C~~	~~8.0'~~	~~4.0'~~	~~12.0'~~

NOTE: RIP-RAP SIZE TO BE CLASS ONE.

1/8 TEMPORARY ROCK CHECK DAM
NO SCALE — CHAR.– MECK. STD. DET. #30.10

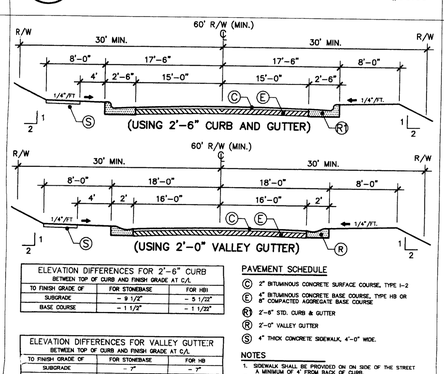

ELEVATION DIFFERENCES FOR 2'-6" CURB
BETWEEN TOP OF CURB AND FINISH GRADE AT C/L

TO FINISH GRADE OF	FOR STONEBASE	FOR HB1
SUBGRADE	– 9 1/2"	– 5 1/2"
BASE COURSE	– 1 1/2"	– 1 1/2"

ELEVATION DIFFERENCES FOR VALLEY GUTTER
BETWEEN TOP OF CURB AND FINISH GRADE AT C/L

TO FINISH GRADE OF	FOR STONEBASE	FOR HB
SUBGRADE	– 7"	– 7"
BASE COURSE	+ 1"	+ 1"

PAVEMENT SCHEDULE
(C) 2" BITUMINOUS CONCRETE SURFACE COURSE, TYPE I-2
(E) 4" BITUMINOUS CONCRETE BASE COURSE, TYPE HB OR 8" COMPACTED AGGREGATE BASE COURSE
(R1) 2'-6" STD. CURB & GUTTER
(R) 2'-0" VALLEY GUTTER
(S) 4" THICK CONCRETE SIDEWALK, 4'-0" WIDE.

NOTES
1. SIDEWALK SHALL BE PROVIDED ON ONE SIDE OF THE STREET A MINIMUM OF 4' FROM BACK OF CURB.
2. THE CROWN (TRANSVERSE SLOPE) FOR THE TYPICAL SECTION ON THIS SHEET IS 3/8" PER FOOT.

1/8 60' R/W RESIDENTIAL COLLECTOR STREET (FOR CAROLINA LILY LANE ONLY)
NO SCALE — CHAR.– MECK. STD. DET. #10.04

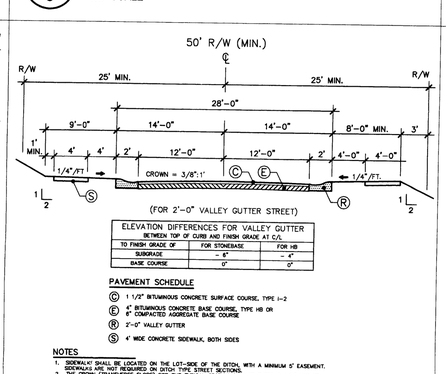

ELEVATION DIFFERENCES FOR VALLEY GUTTER
BETWEEN TOP OF CURB AND FINISH GRADE AT C/L

TO FINISH GRADE OF	FOR STONEBASE	FOR HB
SUBGRADE	– 6"	– 4"
BASE COURSE	0"	0"

PAVEMENT SCHEDULE
(C) 1 1/2" BITUMINOUS CONCRETE SURFACE COURSE, TYPE I-2
(E) 4" BITUMINOUS CONCRETE BASE COURSE, TYPE HB OR 8" COMPACTED AGGREGATE BASE COURSE
(R) 2'-0" VALLEY GUTTER
(S) 4' WIDE CONCRETE SIDEWALK, BOTH SIDES

NOTES
1. SIDEWALK SHALL BE LOCATED ON THE LOT-SIDE OF THE DITCH, WITH A MINIMUM 5' EASEMENT.
2. SIDEWALKS ARE NOT REQUIRED ON DITCH TYPE STREET SECTIONS.
3. THE CROWN (TRANSVERSE SLOPE) FOR THE TYPICAL SECTION ON THIS SHEET IS 3/8" PER FT.
4. STREETS ACCOMMODATING FEWER THAN TEN (10) LOTS OR LESS THAN 250 FEET IN LENGTH, SIDEWALKS WILL ONLY BE REQUIRED ON ONE SIDE OF THE STREET AND NOT ALONG THE CUL-DE-SAC "BULB".

1/8 LOCAL RESIDENTIAL STREET
NO SCALE — CHAR.– MECK. STD. DET. #10.01F

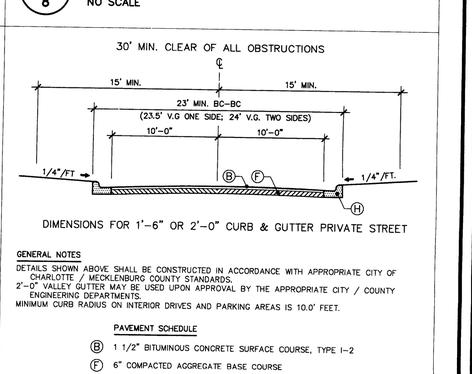

GENERAL NOTES
DETAILS SHOWN ABOVE SHALL BE CONSTRUCTED IN ACCORDANCE WITH APPROPRIATE CITY OF CHARLOTTE / MECKLENBURG COUNTY STANDARDS.
2'-0" VALLEY GUTTER MAY BE USED UPON APPROVAL BY THE APPROPRIATE CITY / COUNTY ENGINEERING DEPARTMENTS.
MINIMUM CURB RADIUS ON INTERIOR DRIVES AND PARKING AREAS IS 10.0' FEET.

PAVEMENT SCHEDULE
(B) 1 1/2" BITUMINOUS CONCRETE SURFACE COURSE, TYPE I-2
(F) 6" COMPACTED AGGREGATE BASE COURSE
(H) 1'-6" STD. CURB & GUTTER OR 2'-0" VALLEY GUTTER (BOTH MAY OCCUR OPPOSITE EACH OTHER)

1/8 PRIVATE STREET SECTION DETAIL
NO SCALE — CHAR.– MECK. STD. DET. #10.07

NOTES:
1. WHERE A TYPE III DRIVEWAY IS APPROVED BY THE CHARLOTTE DEPARTMENT OF TRANSPORTATION (CDOT) THAT CONNECTS TO AN EXISTING SIGNALIZED INTERSECTION OR AT A LOCATION WHERE A TRAFFIC SIGNAL INSTALLATION IS PROPOSED BASED BY CDOT ON A TRAFFIC IMPACT/SIGNAL WARRANT STUDY, A FULL DEPTH ASPHALT PAVEMENT (2 IN. I-2, 6 IN. HB) IS REQUIRED. THIS PAVEMENT DESIGN IS REQUIRED IN THE DRIVEWAY EASEMENT (100-FOOT MINIMUM) TO MAINTAIN DETECTOR LOOPS AND PAVEMENT MARKINGS. A TRAFFIC SIGNAL WILL BE INSTALLED ONLY IF CDOT DETERMINES THAT ONE IS NECESSARY BASED ON A TRAFFIC STUDY OF CURRENT CONDITIONS.
2. A CONCRETE GUTTER TO BE USED EXCEPT AT EXISTING OR PROPOSED TRAFFIC SIGNAL LOCATIONS. AT THESE LOCATIONS ADDITIONAL DRAINAGE REQUIREMENTS WILL BE NECESSARY TO ELIMINATE THE NEED FOR GUTTER ACROSS THE DRIVEWAY CONNECTION.
3. THE DRIVEWAY MUST RISE 6" FROM THE GUTTER LINE TO PREVENT RUNOFF FROM ENTERING DRIVEWAY.
4. FOUR (4) FOOT GUTTER WILL NOT BE REQUIRED TO DIRECT WATER ACROSS DRIVE IF THE DRIVEWAY GUTTER SLOPE IS GREATER THAN 2%.

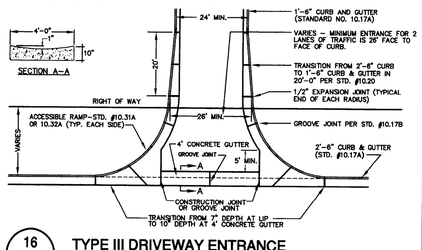

1/8 TYPE III DRIVEWAY ENTRANCE
NO SCALE — CHAR.– MECK. STD. DET. #10.28

GENERAL NOTES
1. CONTRACTION JOINTS SHALL BE SPACED AT 10' INTERVALS. FOR VALLEY GUTTER, A 15' SPACING MAY OCCUR WHEN A MACHINE IS USED. JOINT SPACING MAY BE ALTERED BY THE ENGINEER TO PREVENT UNCONTROLLED CRACKING.
2. CONTRACTION JOINTS MAY BE INSTALLED BY THE USE OF TEMPLATES OR FORMED BY OTHER APPROVED METHODS. WHERE SUCH JOINTS ARE NOT FORMED BY TEMPLATES, A DEPTH OF 1.5" SHALL BE OBTAINED.
3. ALL EXPANSION JOINTS SHALL BE SPACED AT 90' INTERVALS AND ADJACENT TO ALL RIGID OBJECTS. JOINTS SHALL MATCH LOCATIONS OF JOINTS IN ABUTTING SIDEWALK.
4. CONCRETE COMPRESSIVE STRENGTH SHALL BE 3600 PSI IN 28 DAYS.
5. CURB SHALL BE DEPRESSED AT INTERSECTIONS TO PROVIDE FOR FUTURE ACCESSIBLE RAMPS.
6. TOP 6" OF SUBGRADE BENEATH THE CURB AND GUTTER SHALL BE COMPACTED TO 100% STANDARD PROCTOR DENSITY.

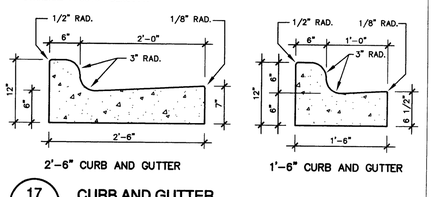

1/8 CURB AND GUTTER
NO SCALE — CHAR.– MECK. STD. DET. #10.17

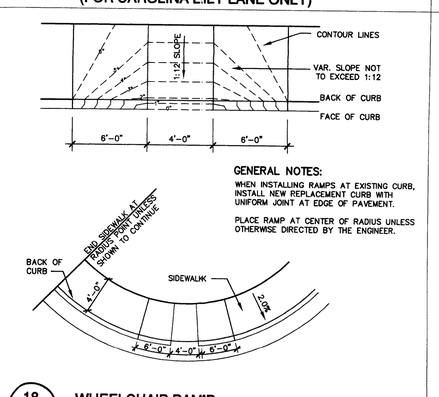

GENERAL NOTES:
WHEN INSTALLING RAMPS AT EXISTING CURB, INSTALL NEW REPLACEMENT CURB WITH UNIFORM JOINT AT EDGE OF PAVEMENT.
PLACE RAMP AT CENTER OF RADIUS UNLESS OTHERWISE DIRECTED BY THE ENGINEER.

1/8 WHEELCHAIR RAMP
NO SCALE — CHAR.– MECK. STD. DET. #10.32/10.33

RELEASED FOR CONSTRUCTION
5/15/2000

TURNBULL DESIGN GROUP, PA
Landscape Architecture
Land Planning
2108 South Boulevard, Suite 100, Charlotte, North Carolina 28203
Phone: 704/522-0600 Fax: 704/522-0602

Revisions:
1. 11/15/99 WCT PER CMPC, MCED REVIEW
2. 11/30/99 WCT PER MCED REVIEW
3. 05/10/00 WCT PER CMPC, MCED REVIEW
4. 06/14/00 WCT PER NCDOT DRIVEWAY PERMIT REVIEW
5. 08/15/00 JSM ADDED SHEET 6A OFFSITE EROSION CONTROL

Scale:	1" = 50'
Date:	08