LEGEND

- IRON PIN FOUND
- IRON PIN SET
- AREA ACQUIRED
- TEMPORARY CONSTRUCTION EASEMENT
- PUBLIC UTILITY EASEMENT
- EXISTING PROPERTY LINE
- EXISTING RIGHT OF WAY
- TEMPORARY CONSTRUCTION EASEMENT LINE
- EXISTING CENTER LINE
- PROPOSED PROPERTY LINE
- EXISTING CURB, GUTTER & EDGE OF PAVEMENT
- PROPOSED CURB, GUTTER & EDGE OF PAVEMENT
- TEMPORARY CONSTRUCTION FENCE
- LOT NUMBER
- PUBLIC UTILITY EASEMENT LINE — PUE —

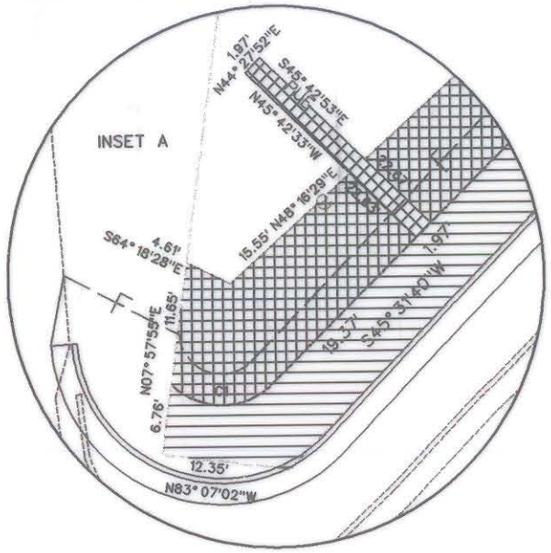

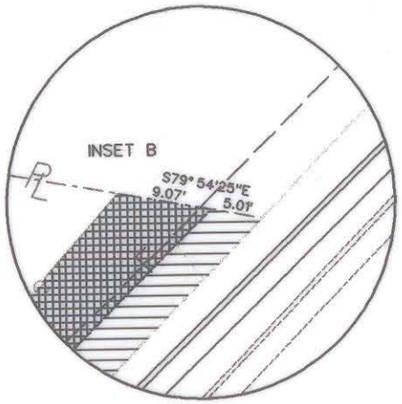

State of North Carolina
County of Mecklenburg

I, CRAIG LONG, Review Officer of Mecklenburg County, certify that the map or plat to which this certification is affixed meets all statutory requirements for recording.

Review Officer _____ Date 8/1/2001

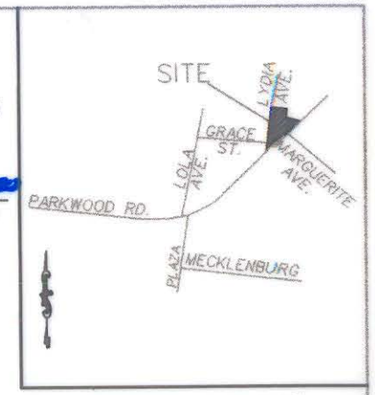

VICINITY MAP (NOT TO SCALE)

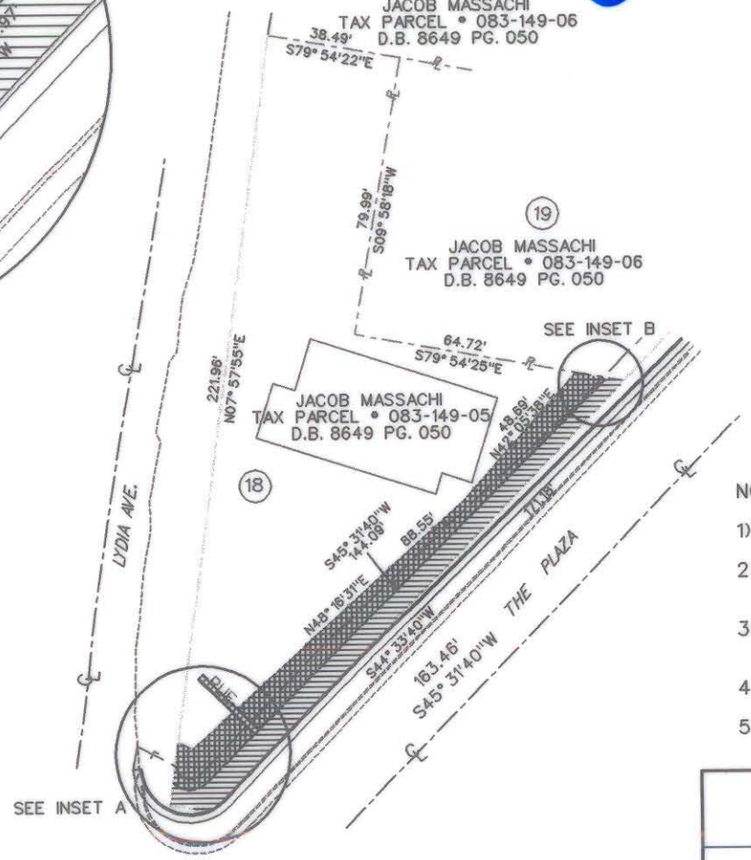

ACQUISITION BY CITY

RECORDED IN DEED BOOK 12576
12576- 789

DATE AUG. 21, 2001

NOTE:

1) TOTAL AREA 11,920.84 SQ FT(.274 ACRE)
2) TEMPORARY CONSTRUCTION EASEMENT 1136.51 SQ FT(0.026 ACRE)
3) PUBLIC UTILITY EASEMENT 44.59 SQ FT(0.001 ACRE)
4) AREA ACQUIRED 993.28 SQ FT(0.023 ACRE)
5) AREA REMAINING 9746.46 SQ FT(0.224 ACRE)

NORTH CAROLINA PROFESSIONAL SEAL L-4031 LAND SURVEYOR JAIME DANILO RAMIREZ

I, J. DANILO RAMIREZ, CERTIFY THAT THIS PLAT WAS PREPARED UNDER MY SUPERVISION AND THAT THE PLAT WAS PREPARED FOR THE PURPOSE OF ACQUISITION AND EASEMENTS ONLY, AND IS NOT INTENDED TO BE A BOUNDARY SURVEY OF PROPERTY SHOWN.

SIGNED _____ J. DANILO RAMIREZ PLS L-4031 DATE 04/20/2000

PREPARED BY:
NOVA DIGITAL SYSTEMS, INC.
ENGINEERING DEPARTMENT
3336 PLEASANT ROAD
FORT MILL, SC 29715
704-527-5816 & 803-548-5927

CHARLOTTE
ENGINEERING DEPARTMENT

REVISIONS	PROPERTY OF JACOB MASSACHI LOT 18 2409 THE PLAZA	JOB NO. 2009
		FILE NO.
SCALE 0 1" = 50' 1"	PARKWOOD/PLAZA INTERSECTION IMPROVEMENT PROJECT PROJ NUM. 512-97-145	SHEET 1
DRAWN BY		OF 1
DATE	DATE SURVEY SUPVR.	