I, MICHAEL C. SAWHILL, HEREBY CERTIFY THAT THIS MAP WAS PREPARED UNDER MY SUPERVISION AND THAT THE PLAT WAS PREPARED FOR THE PURPOSE OF ACQUISITION AND EASEMENTS ONLY, AND IS NOT INTENDED TO BE A BOUNDARY SURVEY OF PROPERTY SHOWN.

Michael C. Sawhill 1/19/11

MICHAEL C. SAWHILL, PLS L-3223 DATE

NORTH CAROLINA PROFESSIONAL SEAL L-3223 LAND SURVEYOR MICHAEL C. SAWHILL

STATE OF NORTH CAROLINA
COUNTY OF MECKLENBURG

I,_____, REVIEW OFFICER OF MECKLENBURG COUNTY, CERTIFY THAT THIS MAP OR PLAT TO WHICH THIS CERTIFICATION IS AFFIXED MEETS ALL STATUTORY REQUIREMENTS FOR RECORDING.

REVIEW OFFICER DATE

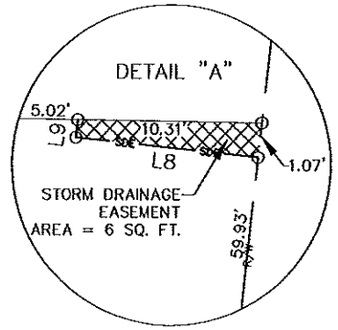

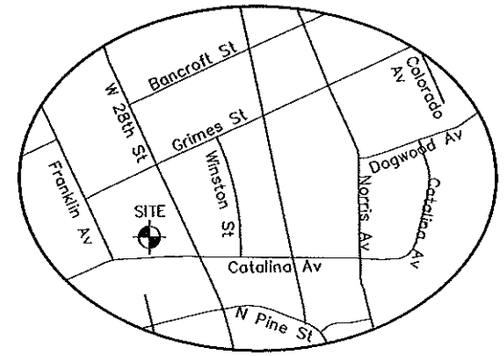

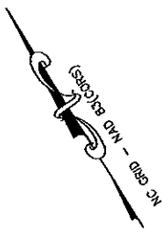

CCFG INC
DEED BOOK 17807, PAGE 775
LOT 15, BLOCK 12
MAP BOOK 04, PAGE 491
TAX # 085-044-37
621 COLORADO AVENUE

SHIRLEY WILKINS
DEED BOOK 24292, PAGE 781
LOT 16, BLOCK 12
MAP BOOK 04, PAGE 491
TAX # 085-044-22
617 COLORADO AVENUE

28

GEORGE BARNETTE, JR.
AND MARTHA E BARNETTE
DEED BOOK 3358, PAGE 336
LOT 20, BLOCK 12 MAP BOOK 04, PAGE 491
TAX # 085-044-23
2725 DOGWOOD AVENUE

27

RICHARD QUEEN AND WIFE
BARBARA W. QUEEN
DEED BOOK 2961, PAGE 436
LOT 21, BLOCK 12 MAP BOOK 04, PAGE 491
TAX # 085-044-21
2721 DOGWOOD AVENUE

26

BETTY JEAN BOYD
DEED BOOK 7433, PAGE 351
LOT 22, BLOCK 12 MAP BOOK 04, PAGE 491
TAX # 085-044-20
2715 DOGWOOD AVENUE

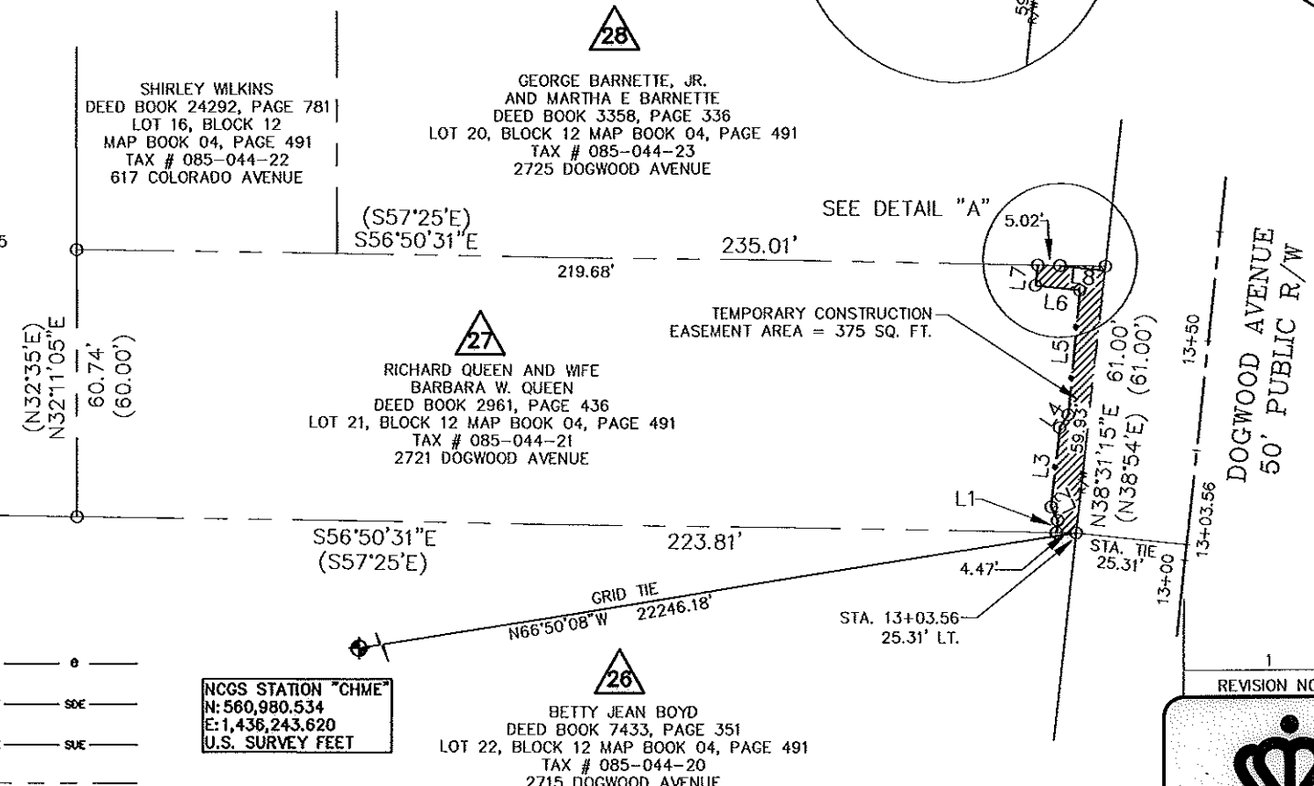

GRAPHIC SCALE

40 0 20 40

(IN FEET)
1 inch = 40 ft.

LINE TABLE		
LINE	LENGTH	BEARING
L1	2.76	N37°26'16"E
L2	3.39	N06°57'23"E
L3	18.11	N38°21'36"E
L4	3.50	N65°41'39"E
L5	28.46	N37°35'25"E
L6	10.08	N51°38'24"W
L7	4.68	N38°33'14"E
L8	10.27	N51°38'24"W
L9	0.13	N38°33'14"E

LEGEND

- Temporary Construction Easement ..... —— e —— e ——
- Storm Drainage Easement ..... —— SDE —— SDE ——
- Sidewalk/Utility Easement ..... —— SUE —— SUE ——
- Existing Right Of Way Line..... —— R/W —— — —
- Existing Property Line ..... —— — —
- Temporary Construction Easement .....
- Storm Drainage Easement.....
- Calculated Point.. ..... o
- Bearing And Distance Per Plat..... (N42°36'30"W) (100.00')

NCGS STATION "CHME"
N: 560,980.534
E: 1,436,243.620
U.S. SURVEY FEET

AREA TABLE
PARCEL AREA = 14,068 SQ. FT.
STORM DRAINAGE EASEMENT = 6 SQ. FT.
TEMPORARY CONSTRUCTION EASEMENT = 375 SQ. FT.
AREA REMAINING=14,068 SQ. FT.

REVISION NO.	DATE	DESCRIPTION
1	01/19/11	CORRECTED OWNER

CHARLOTTE.
ENGINEERING & PROPERTY MANAGEMENT

THE SURVEY COMPANY, INC.
6105-D STUART ANDREW BLVD
CHARLOTTE, NC 28217
(704) 561-1970 (704) 561-1972 FAX

1" = 40 SCALE
02/15/10 DATE

RICHARD QUEEN AND WIFE
BARBARA W. QUEEN
2721 DOGWOOD AVENUE
Tax ID # 085-044-21

Parcel # 27

TRYON HILLS NEIGHBORHOOD IMPROVEMENT PROJECT
Project Number: 512-07-031

Path
PATH

ACQUISITION BY DB 26407 PG 131